KNOX by POLIS DESIGNS

Standard Features:

- Advanced unidirectional suspension system
- Premium high-density, high-resiliency foam seat
- Quick ship delivery
- Limited lifetime warranty on frame
- Brushed stainless steel legs and detailing

Options:

- Wood base and back support available in Dune, Ebony, Mink, or Oiled Ash finish
- Solid Natural Walnut wood base and back support available
- Contrasting back pillows available

Please use actual leather, fabric, Crypton®, Sunbrella® and Ultrasuede® swatches when specifying furniture as the colors shown may vary due to the printing process.

KNX-DAY-LA

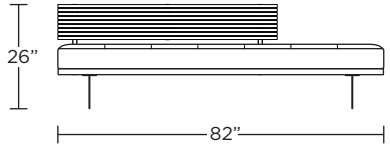

KNX-DAY-RA

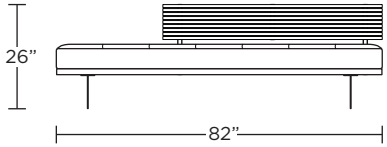

KNX-PLW-ST

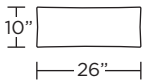

KNX-PLW-ST

KNX-DAY-LA

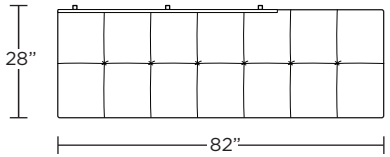

KNX-DAY-RA

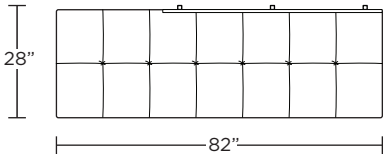

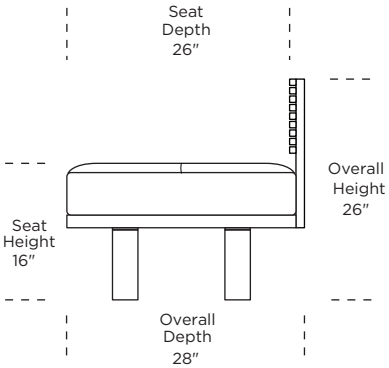

Scale : 1/4 inch = 1 foot
All dimensions are approximate and subject to change.
Specify all components from the sitting position.

V05.02.24